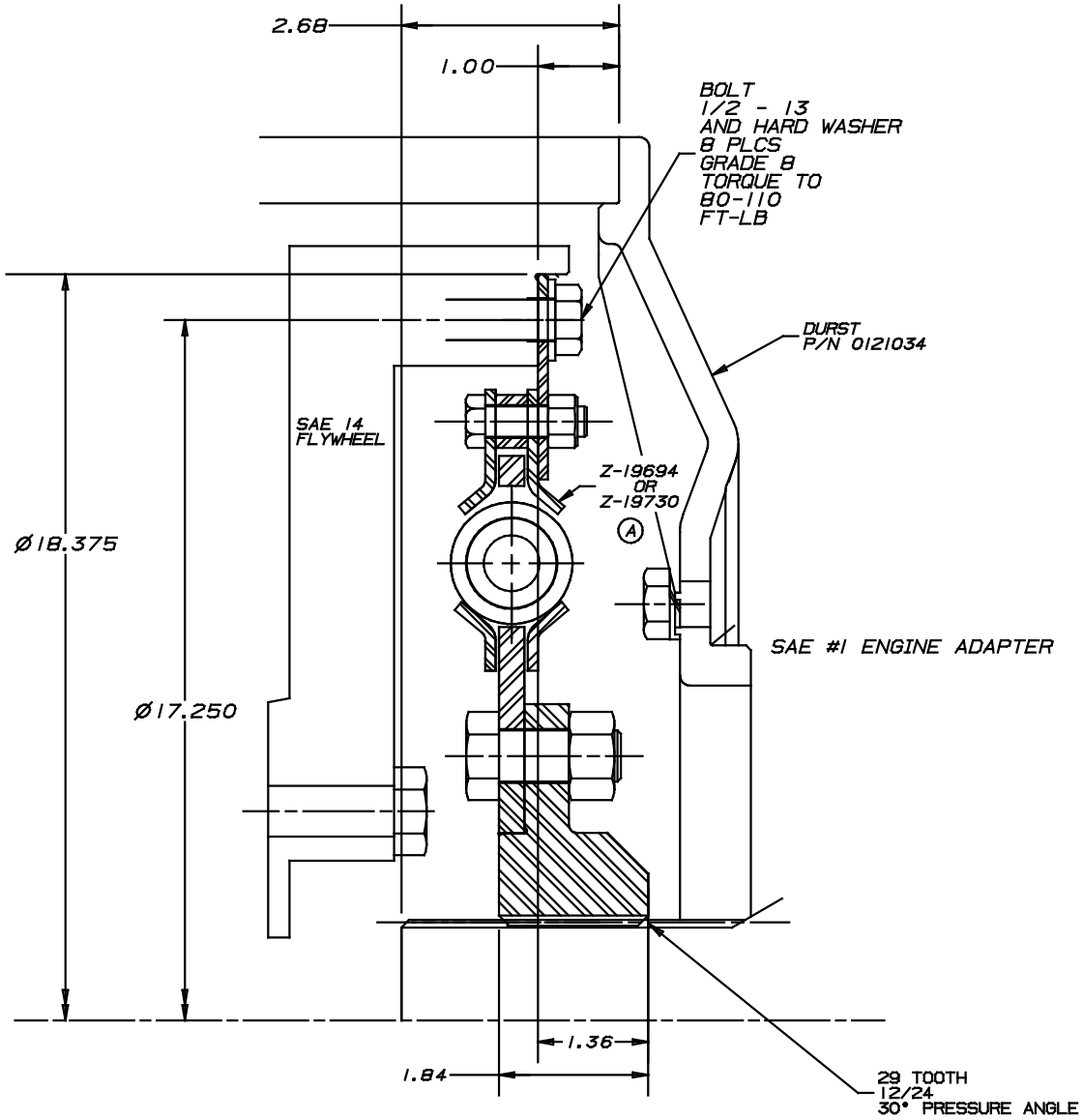

CHANGE LETTER	REVISION	DRN	APPD	DATE
A	ADDED Z-19730	DDP		28MY10

2. ALL DEVIATIONS FROM DESIGN REQUIRE PRIOR WRITTEN AUTHORIZATION FROM TORSION CONTROL PRODUCTS, INC. ENGINEERING.

1. ALL INFORMATION AND RIGHTS CONTAINED HEREIN ARE PROPRIETARY. REPRODUCTION OR DISCLOSURE TO THIRD PARTY WITHOUT PRIOR WRITTEN PERMISSION FROM TORSION CONTROL PRODUCTS, INC. IS PROHIBITED.

APPLY ANTI-SEIZE TO SPLINE

TORSION CONTROL PRODUCTS, INC.
1900 NORTHFIELD DR.
ROCHESTER HILLS, MI 48309-3823

UNLESS OTHERWISE SPECIFIED
DIMENSIONS ARE IN INCHES
4 PLACE DECIMAL ± .0005
3 PLACE DECIMAL ± .0050
2 PLACE DECIMAL ± .0100
ANGULAR DIM. ± 0° 30'

MACHINED SURFACES 125 (RMS) OR BETTER

SCALE: FULL | FORMAT: "C"
DO NOT SCALE | REF:

PROJECT:

	DRAWN	CHECKED	MATERIAL	APPROVED
NAME	DDP			
DATE	04NOO9			

DRAWING NAME
LAYOUT
PUMP DRIVE
PROPOSAL #1

MATERIAL

DRAWING NO. 23639

CHANGE LETTER A